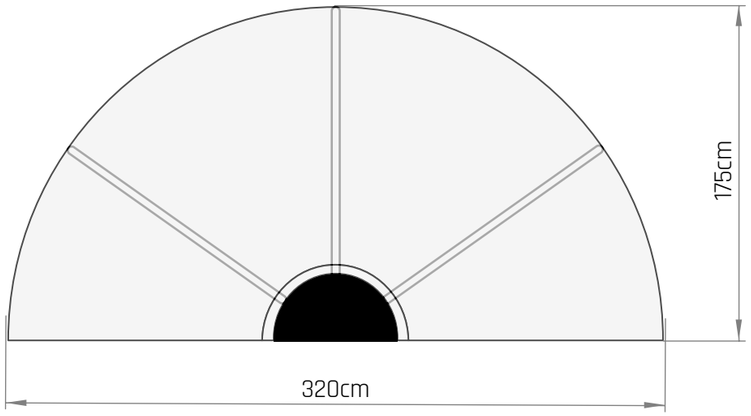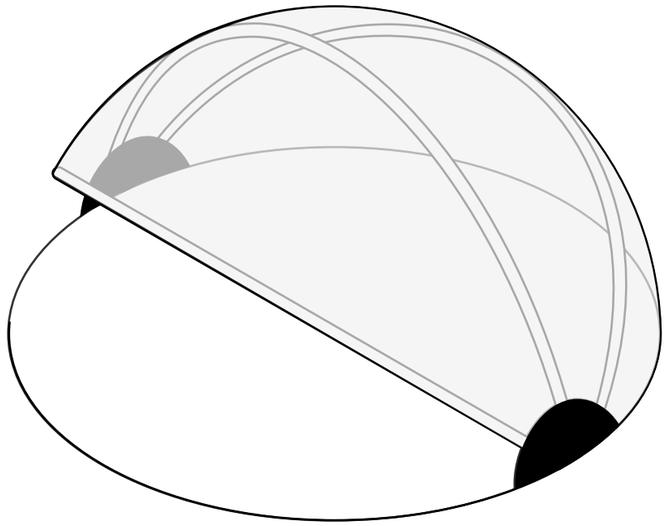EXIT Pool dome