EXIT GetSet PS510

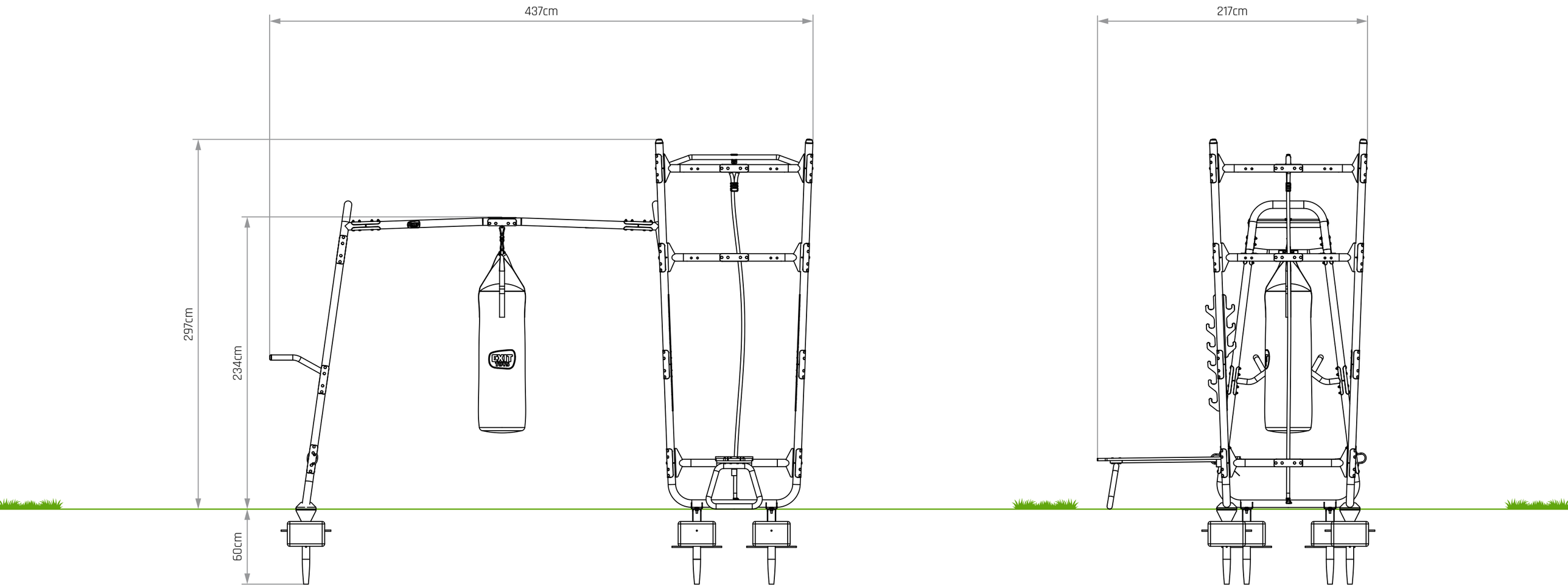
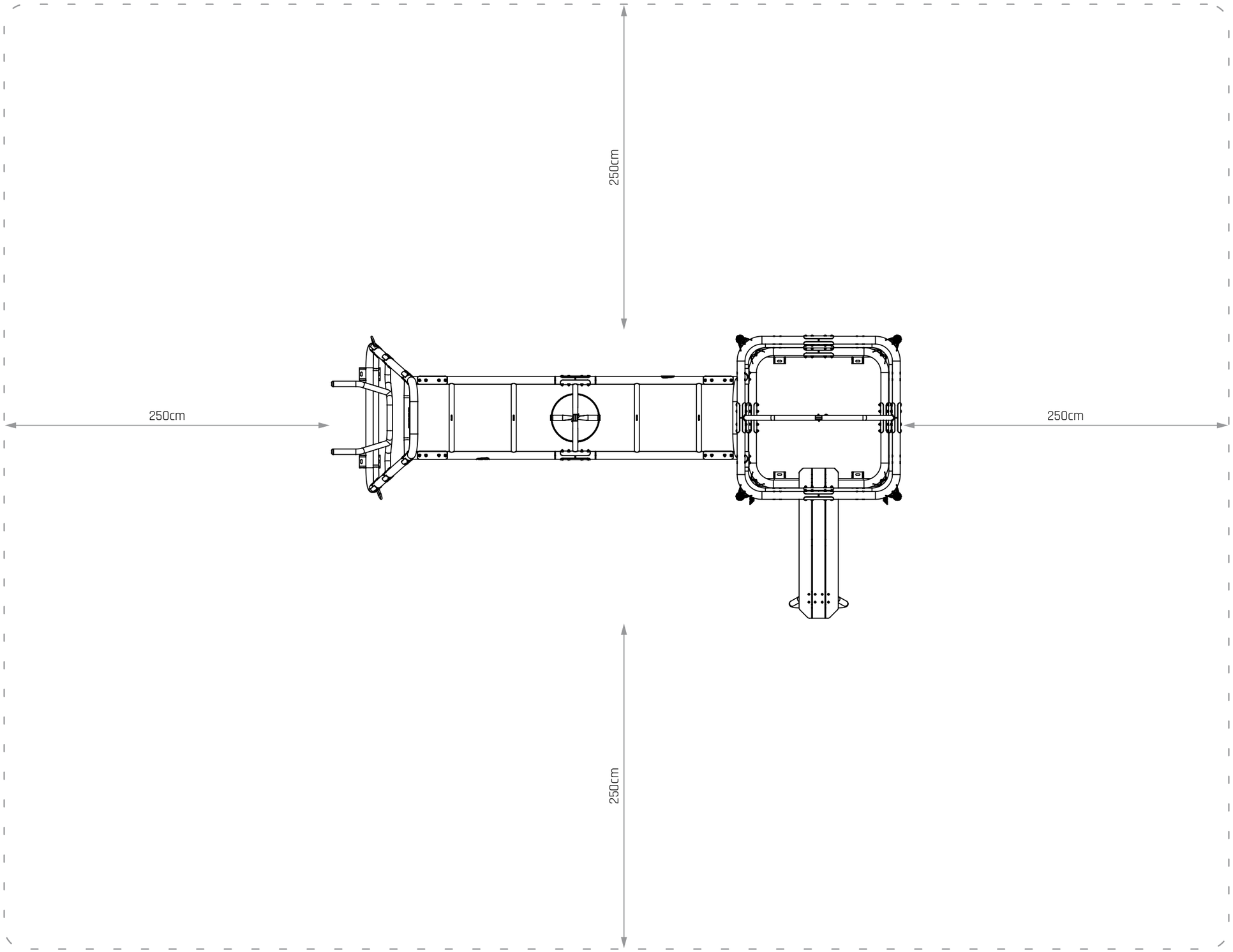
EXIT GetSet PS510